MC-F Flanged submersible pumps TWO-CHANNEL

Sewage
Civil use
Industrial use

※ **High quality materials and robustness assure superior performance and reliability**

PERFORMANCE RANGE

- Flow rate up to **1600 l/min** (96 m^3/h)
- Head up to **25 m**

INSTALLATION AND USE

The **MC-F** series is constructed from thick cast iron, offering exceptional robustness, abrasion resistance, and longevity. Featuring **TWO-CHANNEL** impellers, these pumps are designed to drain liquids containing suspended solids and short fibers, as well as wastewater, **sewage, sludge-mixed water, groundwater, and surface water** in various settings including apartment buildings, public facilities, industrial sites, parking facilities, and washing areas.

APPLICATION LIMITS

- Depth below water level up to **10 m** (with an appropriately sized power cable)
- Liquid temperature up to **+40 °C**
- Suspended solids transfer:
  – up to **Ø 50 mm** for **MC /50-F**
  – up to **Ø 65 mm** for **MC /65-F**
- **Minimum immersion for continuous service:**
  – 320 mm for MC /50
  – 360 mm for MC /65

INCLUDES

※ Power cable length **10 m**
※ Float switch (exclusive to single-phase models)
※ Switchbox compatible with single-phase versions

AVAILABLE UPON REQUEST

※ Coupling foot kit
※ **QES** control panel for three-phase pumps
※ Different voltage requirements 60 Hz frequency

WARRANTY

※ **The warranty for three-phase models remains valid only if the motor's built-in thermal protector is properly connected to the control panel. This connection is essential for the warranty's applicability.**

PATENTS - TRADE MARKS - MODELS

- Patent No. IT0001428923

CURVES AND PERFORMANCE DATA

50 Hz

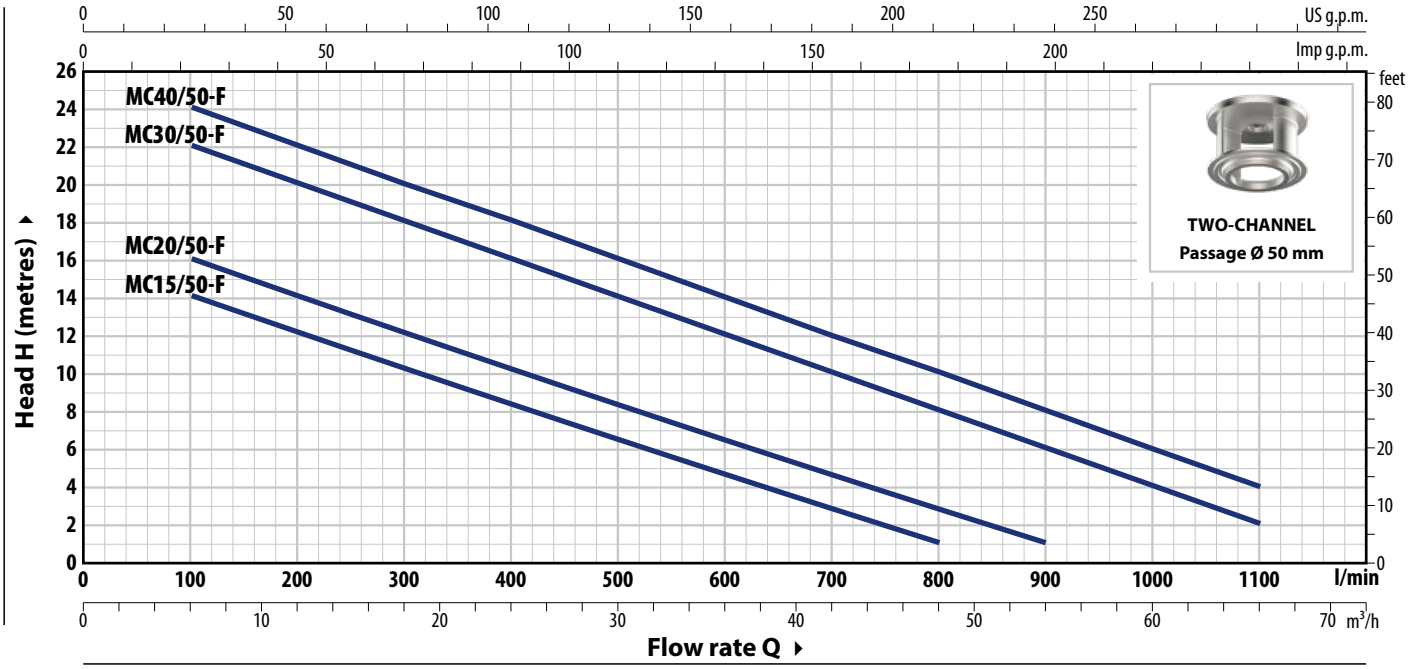

TYPE		POWER (P2)		Q m³/h	0	6	12	18	24	30	36	42	48	54	60	66
Single-phase	**Three-phase**	**kW**	**HP**	Q l/min	**0**	**100**	**200**	**300**	**400**	**500**	**600**	**700**	**800**	**900**	**1000**	**1100**
MCm 15/50-F	**MC 15/50-F**	1.1	1.5	H metres	16	14	12.5	10.5	8.5	6.5	4.5	3	1			
MCm 20/50-F	**MC 20/50-F**	1.5	2		18	16	14	12.5	10.5	8.5	6.5	5	3	1		
MCm 30/50-F	**MC 30/50-F**	2.2	3		24	22	20	18	16	14	12	10	8	6	4	2
–	**MC 40/50-F**	3	4		25	24	22	20	18	16	14	12	10	8	6	4

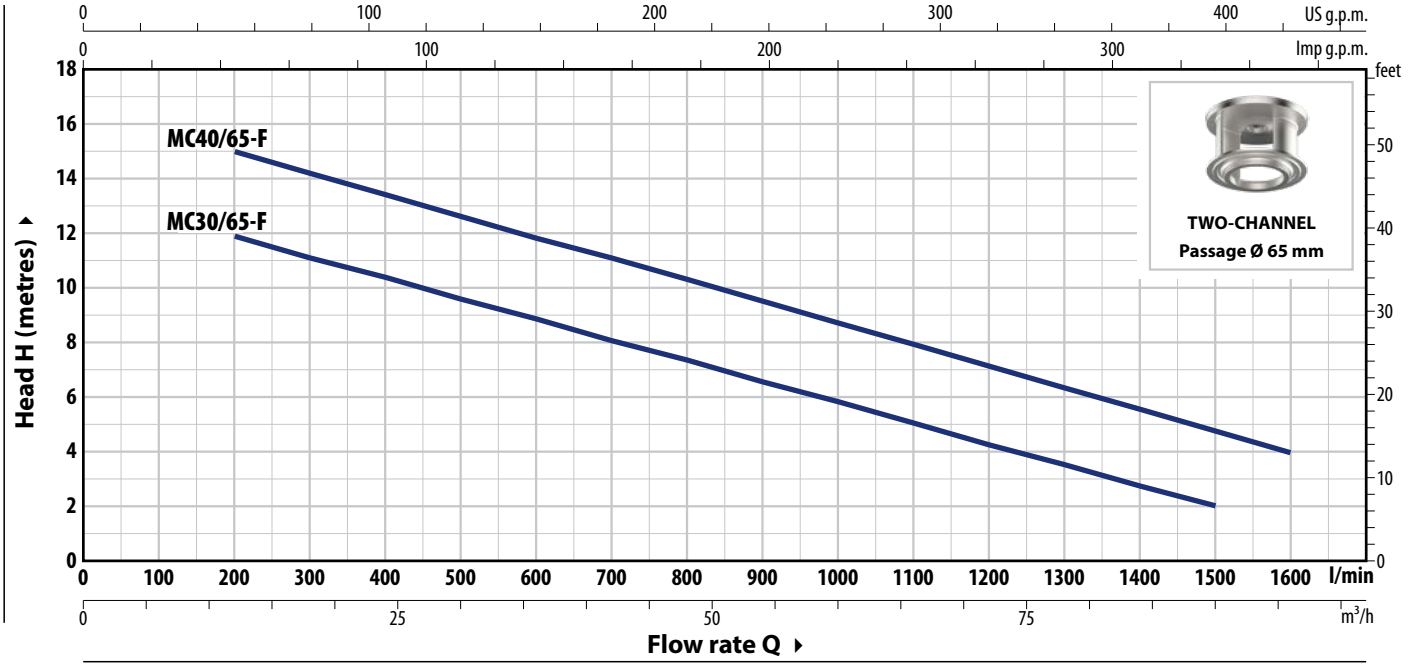

TYPE		POWER (P2)		Q m³/h	0	12	24	36	48	60	66	72	90	96
Single-phase	**Three-phase**	**kW**	**HP**	Q l/min	**0**	**200**	**400**	**600**	**800**	**1000**	**1100**	**1200**	**1500**	**1600**
MCm 30/65-F	**MC 30/65-F**	2.2	3	H metres	13	12	10.5	9	7.5	6	5	4.5	2	
–	**MC 40/65-F**	3	4		17	15	13.5	12	10.5	8.5	8	7	4.8	4

Q = Flow rate **H** = Total manometric head

Performance curves comply with EN ISO 9906 Grade 3B tolerance limits.

ABSORPTION

TYPE **Single-phase**	VOLTAGE **230 V**
MCm 15/50-F	10.5 A
MCm 20/50-F	14.0 A
MCm 30/50-F	18.0 A
MCm 30/65-F	14.0 A

TYPE **Three-phase**	VOLTAGE **400 V**
MC 15/50-F	4.5 A
MC 20/50-F	5.0 A
MC 30/50-F	6.5 A
MC 40/50-F	7.0 A
MC 30/65-F	6.5 A
MC 40/65-F	7.5 A

DIMENSIONS AND WEIGHT

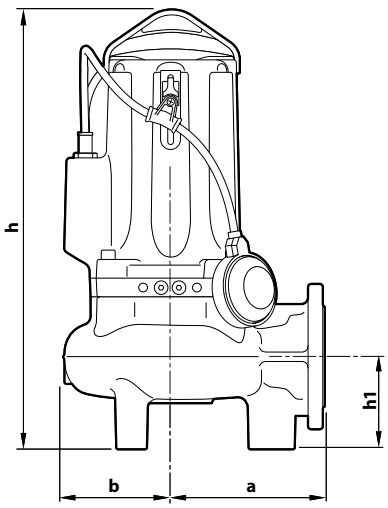

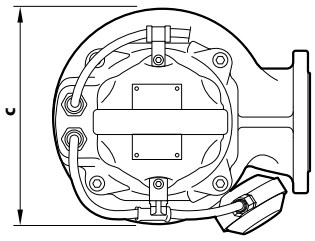

TYPE		Passage of solid bodies	DIMENSIONS mm					kg	
Single-phase	**Three-phase**		a	b	c	h	h1	1~	3~
MCm 15/50-F	**MC 15/50-F**	**50 mm**	170	119	242	487	102	43.6	42.0
MCm 20/50-F	**MC 20/50-F**							44.6	43.5
MCm 30/50-F	**MC 30/50-F**					513 | 487		50.0	45.5
–	**MC 40/50-F**					513		–	49.8
MCm 30/65-F	**MC 30/65-F**	**65 mm**	210	120	246	547 | 521	123	51.8	48.0
–	**MC 40/65-F**					547		–	52.8

PORT FLANGE

TYPE	FLANGE	F	K	D	L	HOLES	
			mm	mm	mm	N°	Ø (mm)
MC /50-F	**DN65** (PN10)	**2½"**	145	185	160	4	18
MC /65-F	**DN80** (PN10)	**3"**	160	200	180	8	18

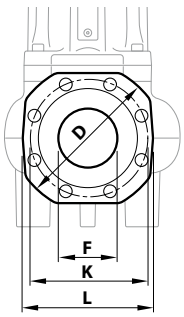

MATERIALS AND COMPONENTS

1	**Pump body**	Cast iron with cataphoresis treatment with flanged and threaded ISO 228/1 port
2	**Impeller**	TWO-CHANNEL type in micro-cast **AISI 304** stainless steel
3	**Motor holder**	Cast iron with cataphoresis treatment
4	**Motor bracket**	Cast iron with cataphoresis treatment
5	**Motor shaft**	Stainless steel **AISI 431**

6 Double mechanical seal with interposed oil chamber

Seal	Shaft	Location	Materials
STA-22	Ø 22 mm	Motor side	Ceramic / Graphite / NBR
STA-20	Ø 20 mm	Pump side	Silicon carbide/Silicon carbide/NBR

7 Electric Motor

MCm-F: single-phase 230 V - 50 Hz
with thermal motor protection

MC-F: three-phase 400 V - 50 Hz
※ with winding integrated thermal motor protection (to be connected to the control panel supplied on request)

– Insulation: class F
– Protection rating: IP X8

8 Power cord
※ 10 metres 'H07 RN-F' type

9 Control panel
(exclusive to single-phase models)

With capacitor and manual reset motor protection switch

10 Float switch
(exclusive to single-phase models)

Control panel
(standard for single-phase versions)

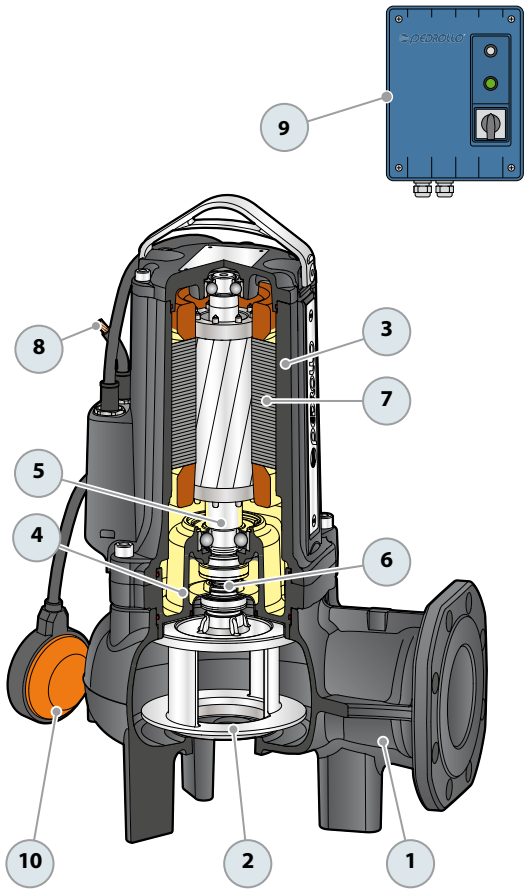

OPTIONAL - Support base
(Cod. ASSBAVM)

SEWAGE LIFTING SYSTEM VXC-F - MC-F

VERSION WITH HORIZONTAL DELIVERY AND ¾" GUIDE PIPES

For **VXC /50-F, MC /50-F**	Code ASSVXCF051	**DN 2"**

※ Kit consisting of:

Coupling foot

Slide rail with screws and gasket

Support for guide tubes

VERSION WITH VERTICAL DELIVERY AND ¾" GUIDE PIPES

For **VXC /50-F, MC /50-F**	Code ASSVXCF051V	**DN 2½"**
For **VXC /65-F, MC /65-F**	Code ASSVXCF071V	**DN 3"**

VERSION WITH VERTICAL DELIVERY AND 2" GUIDE TUBES

For **VXC /50-F, MC /50-F**	Code ASSVXCF0704V	**DN 3"**
For **VXC /65-F, MC /65-F**	Code ASSVXCF0705V	

※ Kit consisting of:

Coupling foot complete with counterflange

Slide rail with screws and gasket

Support for guide tubes

● ACCESSORIES AVAILABLE FOR ORDER

RUNNING GUIDE

※ For VXC /50-F, MC /50-F with guide tubes Ø ¾".	Code ASSFL0017
※ For VXC /65-F, MC /65-F with guide tubes Ø ¾".	Code ASSFL0018
※ For VXC /50-F, MC /50-F with guide tubes Ø 2".	Code ASSFL071
※ For VXC /65-F, MC /65-F with guide tubes Ø 2".	Code ASSFL072

Complete with screws and seals

for Ø ¾" guide tubes

for guide tubes Ø 2"

INTERMEDIATE GUIDE TUBE SUPPORT

※ For Ø ¾" guide tubes	Code 859SV340INTFA
※ For guide tubes Ø 2"	Code 859SV349INTFA

For reasons of stability, interpose a support:
– every 2 metres with ¾ " guide pipes (mandatory)
– every 3 metres with 2" guide tubes (recommended)

for Ø ¾" guide tubes

for guide tubes Ø 2"

GUIDE TUBE (AISI 304 stainless steel)

※ 2 metres Ø ¾" guide tube	Code 54SARTG0052F
※ 3 metres Ø ¾" guide tube	Code 54SARTG0053F
※ 6 metres Ø ¾" guide tube	Code 54SARTG0056F
※ 3 metres Ø 2" guide tube	Code 54SARTG0063F
※ 6 metres guide tube Ø 2"	Code 54SARTG0066F

DIMENSIONS (Version with horizontal outlet)

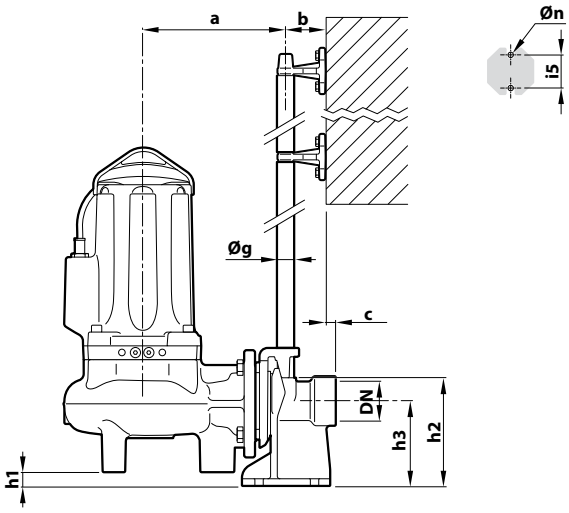

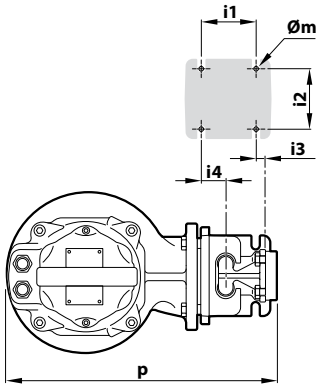

TYPE	Solid bodies mm	PORT DN	DIMENSIONS mm														
			a	b	c	p	h1	h2	h3	i1	i2	i3	i4	i5	Øg	Øm	Øn
VXC /50 -F MC /50 -F	Ø 50	2"	216	61	17	412	28	165	130	85	94	16	40	50	¾"	12	11

DIMENSIONS (Version with vertical delivery)

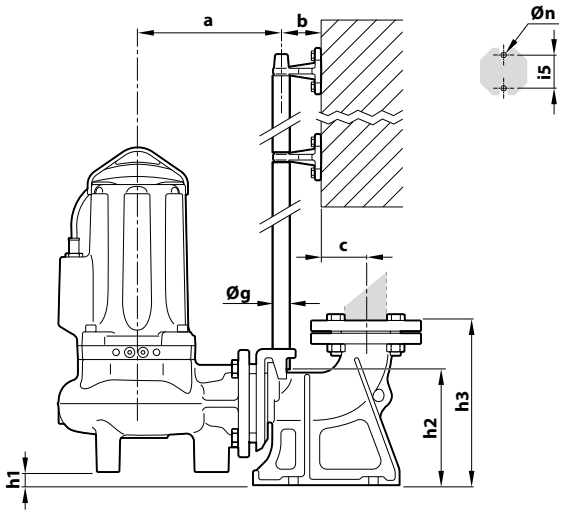

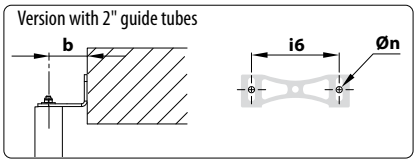

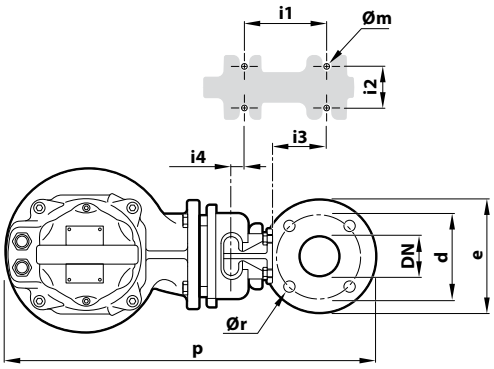

Version with ¾" guide tubes

TYPE	Solid bodies mm	PORT DN	DIMENSIONS mm																	
			a	b	c	d	e	p	h1	h2	h3	i1	i2	i3	i4	i5	Øg	Øm	Øn	Ør
VXC /50 -F MC /50 -F	Ø 50 mm	2½"	213	61	52	125	165	526	25.5	164	215	120	72	62	3	50	¾"	14	11	18
VXC /65 -F MC /65 -F	Ø 65 mm	3" (PN6)	253	61	69	150	190	598	46	216	279	130	112	84	15	50	¾"	14	11	18

Version with 2" guide tubes

TYPE	Solid bodies mm	PORT DN	DIMENSIONS mm																		
			a	b	c	d	e	p	h1	h2	h3	i1	i2	i3	i4	i5	i6	Øg	Øm	Øn	Ør
VXC /50 -F MC /50 -F	Ø 50 mm	3" (PN10)	320	85	95	160	200	718	105	265	392	250	150	35	-130	–	187	2"	22	13.5	18
VXC /65 -F MC /65 -F	Ø 65 mm	3" (PN10)	359	85	95	160	200	760	84	256	392	250	150	35	-130	–	187	2"	22	13.5	18